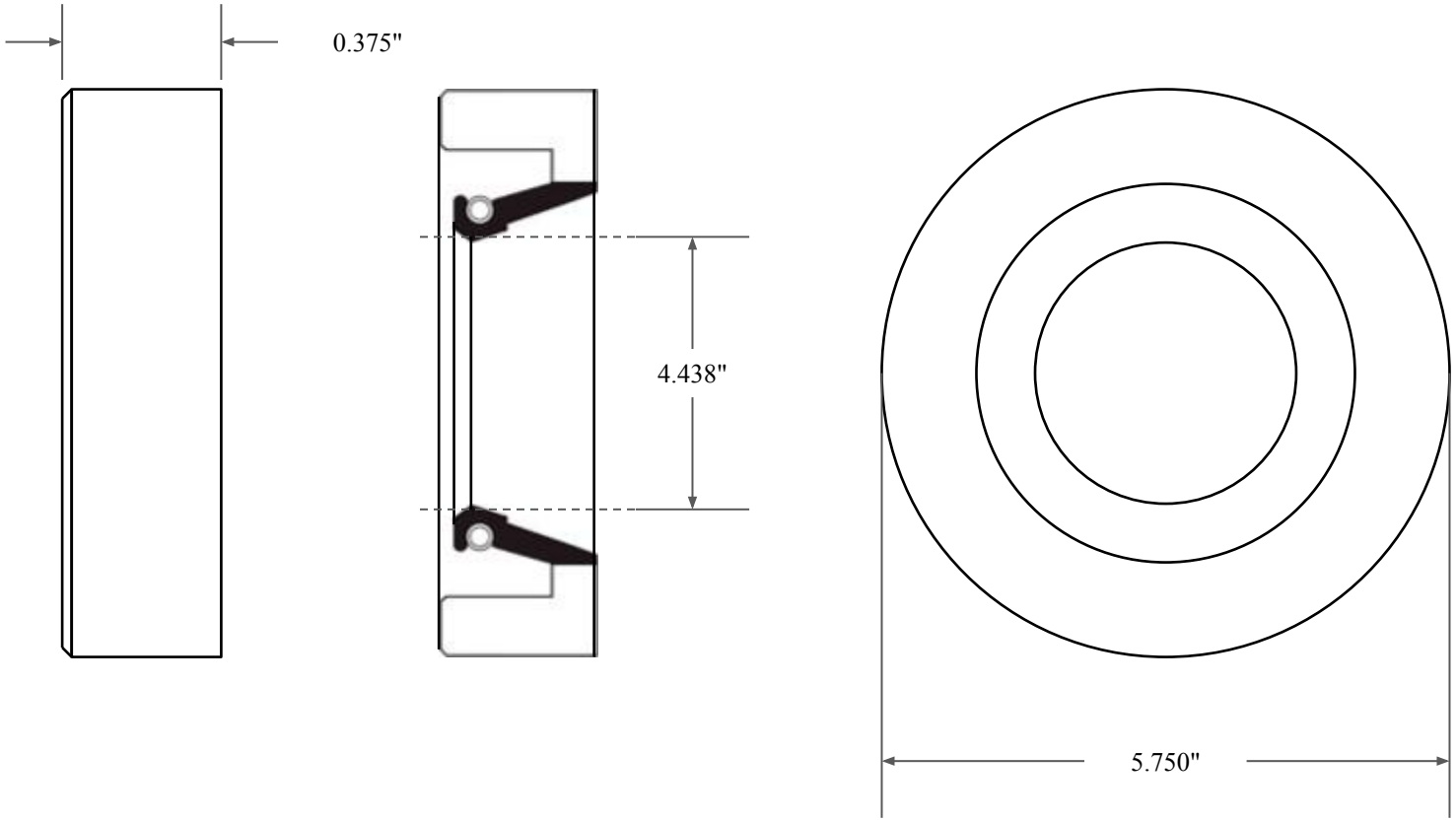

GLOBAL O-RING and SEAL
ALL-AROUND BETTER

14450 John F. Kennedy Blvd.
Houston, TX 77032
www.globaloring.com

Information in this drawing is provided for reference only

PART NUMBER **FRS11877A**

Fabric Reinforced Oil Seal - Nitrile 90 Style A
Ref: JM Clipper 8813 H1L5