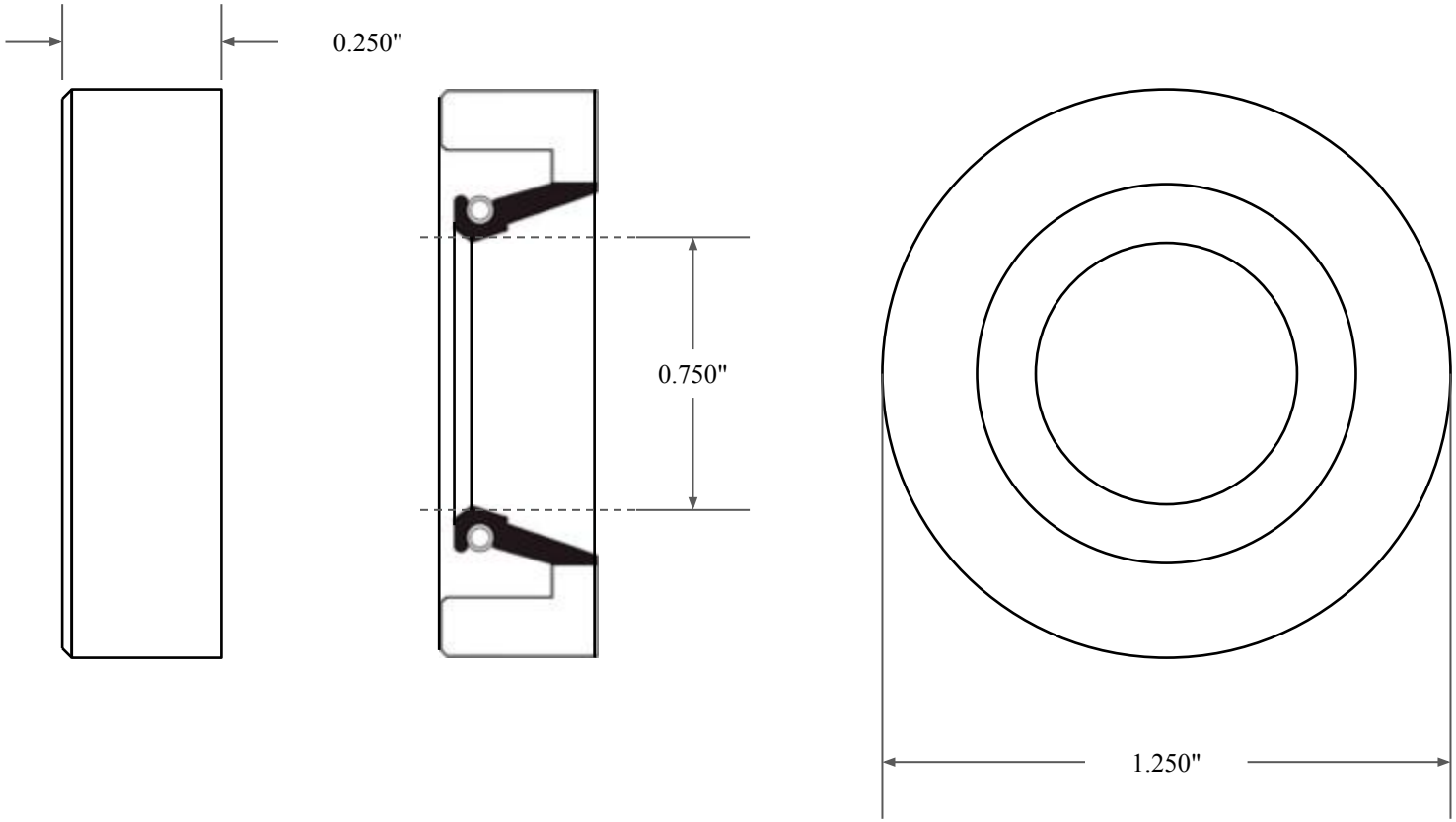

GLOBAL O-RING and SEAL ALL-AROUND BETTER	PART NUMBER **FRS1773A90**
14450 John F. Kennedy Blvd. Houston, TX 77032 www.globaloring.com	Fabric Reinforced Oil Seal - Nitrile 90 Style A Ref: JM Clipper 9651 H1L7
Information in this drawing is provided for reference only	