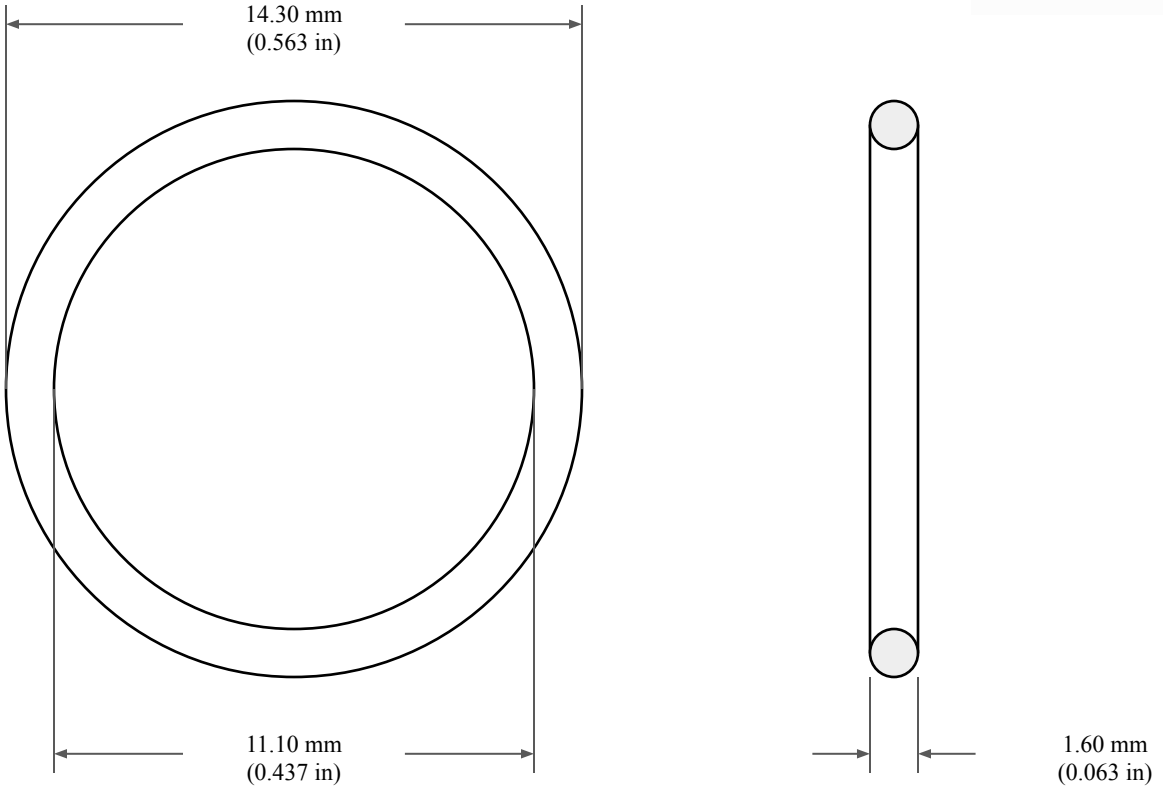

CS: 1.60 mm ±0.08 mm (0.063" ±0.003")

ID: 11.10 mm ±0.18 mm (0.437" ±0.007")

GLOBAL O-RING and SEAL ALL-AROUND BETTER	PART NUMBER **H1.60X011.1**
14450 John F. Kennedy Blvd. Houston, TX 77032 www.globaloring.com	Nitrile 90 Duro Metric O-Ring 1.60 mm CS X 11.10 mm ID
Information in this drawing is provided for reference only	

Compound	N90-A101	Nitrile (Buna), General Purpose
	Temperature Range (Static):	-25°C to 121°C
	Cure System:	Sulfur
	Specification	M7BG910 A14 B14 EA14 EF11 EF21 EO14 EO34 Z

Compound Previously Known As: N90101

		Required Results	Typical Results
Properties	Hardness, Shore A, pts	90±5	87
	Tensile Strength, psi, min	1450(min)	2290
	Elongation, min, %	100(min)	133
	Modulus @ 100%, psi		1892
	Density, Mg/m3		1.37
A14	Hardness Change, pts, Shore A	±15	+4
	Tensile Strength Change, %	±30	+5
	Elongation Change, %	-50(max)	-19
	Weight Change, % -0.5		-0.5
B14	ASTM D395-18, Method B	25%(button)(max)	15.0
EA14	Hardness Change, pts, Shore A	±10	-4
	Tensile Strength Change, %		+4
	Elongation Change, %		-11
	Volume Change, %	±15	+3
EF11	Hardness Change, pts, Shore A	±10	-5
	Tensile Strength Change, %	-25(max)	-3
	Elongation Change, %	-25(max)	+2
	Volume Change, %	-5~+10	+4
EF21	Hardness Change, pts, Shore A	-30~0	-14
	Tensile Strength Change, %	-60(max)	-21
	Elongation Change, %	-60(max)	-17
	Volume Change, %	0~+40	+21
EO14	Hardness Change, pts, Shore A	-5~+5	+1
	Tensile Strength Change, %	-25(max)	-3
	Elongation Change, %	-45(max)	-18
	Volume Change, %	-10~+5	-4
EO34	Hardness Change, pts, Shore A	-10~+5	-3
	Tensile Strength Change, %	-45(max)	+3
	Elongation Change, %	-45(max)	-12
	Volume Change, %	0~+25	+8
TR-10	51 mm die, 50% elongation, °C		-20