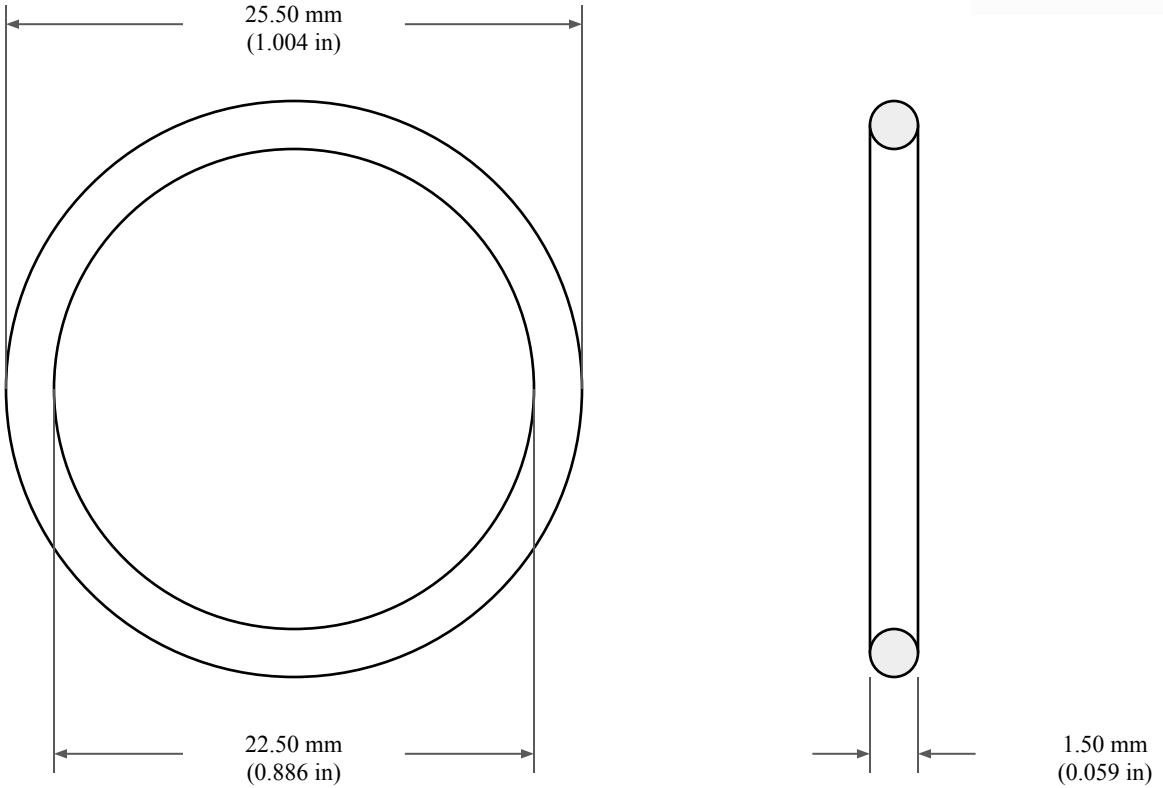


CS: 1.50 mm ±0.08 mm (0.059" ±0.003")

ID: 22.50 mm ±0.24 mm (0.886" ±0.009")

| | |
|---|---|
| GLOBAL O-RING and SEAL<br>ALL-AROUND BETTER | PART NUMBER **N1.50X022.5** |
| 14450 John F. Kennedy Blvd.<br>Houston, TX 77032<br>www.globaloring.com | Nitrile 70 Duro Metric O-Ring 1.50 mm CS X 22.50 mm ID |
| Information in this drawing is provided for reference only | |

| | | |
|---|---|---|
| **Compound** | N70-A101 | Nitrile (Buna), General Purpose |
| | Temperature Range (Static) | -30°C to 121°C |
| | Specification: | M2BG714 A14 B14 EF11 EF21 EO14 EO34 |

Compound Previously Known As: N70101

| | | Required Results | Typical Results |
|---|---|---|---|
| **Properties** | Hardness, (Shore A) | 70±5 | 70 |
| | Tensile Strength, psi(MPa) | 2031(min) | 2547 |
| | Elongation, (%) | 250(min) | 288 |
| | Modulus at 100%, psi(MPa) | | 816 |
| | Density, ($Mg/m^3$) | | 1.24 |
| **A14** | Hardness Change, pts. | ±15 | +5 |
| | Tensile Strength Change, % | ±30 | +14 |
| | Elongation Change, % | -50(max) | -13 |
| | Weight Change, % | | -1.1 |
| **B14** | - | 25%(button)(max) | 13 |
| **EF11** | Hardness Change, pts. | ±10 | -4 |
| | Tensile Strength Change, % | -25(max) | -22 |
| | Elongation Change, % | -25(max) | -8 |
| | Volume Change, % | -5~+10 | +3 |
| **EF21** | Hardness Change, pts. | -30~0 | -9 |
| | Tensile Strength Change, % | -60(max) | -18 |
| | Elongation Change, % | -60(max) | -21 |
| | Volume Change, % | 0~+40 | +12 |
| **EO14** | Hardness Change, pts. | -5~+10 | +3 |
| | Tensile Strength Change, % | -25(max) | +6 |
| | Elongation Change, % | -45(max) | -18 |
| | Volume Change, % | -10~+5 | -4 |
| **EO34** | Hardness Change, pts. | -10~+5 | -3 |
| | Tensile Strength Change, % | -45(max) | +5 |
| | Elongation Change, % | -45(max) | -20 |
| | Volume Change, % | 0~+25 | +10 |