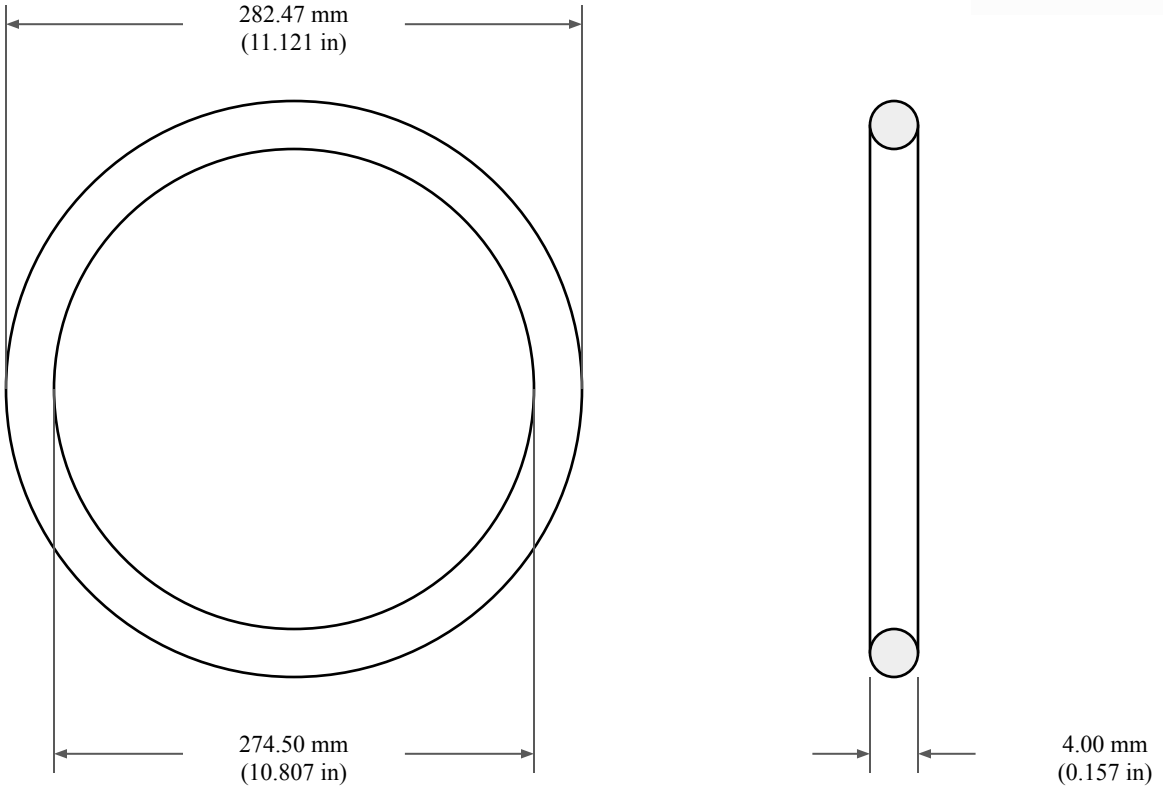

CS: 4.00 mm ±0.10 mm (0.157" ±0.004")

ID: 274.50 mm ±2.02 mm (10.807" ±0.080")

GLOBAL O-RING and SEAL ALL-AROUND BETTER	PART NUMBER **N4.00X274.5**
14450 John F. Kennedy Blvd. Houston, TX 77032 www.globaloring.com	Nitrile 70 Duro Metric O-Ring 4.00 mm CS X 274.50 mm ID
Information in this drawing is provided for reference only	

Compound	N70-A101	Nitrile (Buna), General Purpose
	Temperature Range (Static)	-30°C to 121°C
	Specification:	M2BG714 A14 B14 EF11 EF21 EO14 EO34

Compound Previously Known As: N70101

		Required Results	Typical Results
Properties	Hardness, (Shore A)	70±5	70
	Tensile Strength, psi(MPa)	2031(min)	2547
	Elongation, (%)	250(min)	288
	Modulus at 100%, psi(MPa)		816
	Density, (Mg/m^3)		1.24
A14	Hardness Change, pts.	±15	+5
	Tensile Strength Change, %	±30	+14
	Elongation Change, %	-50(max)	-13
	Weight Change, %		-1.1
B14	-	25%(button)(max)	13
EF11	Hardness Change, pts.	±10	-4
	Tensile Strength Change, %	-25(max)	-22
	Elongation Change, %	-25(max)	-8
	Volume Change, %	-5~+10	+3
EF21	Hardness Change, pts.	-30~0	-9
	Tensile Strength Change, %	-60(max)	-18
	Elongation Change, %	-60(max)	-21
	Volume Change, %	0~+40	+12
EO14	Hardness Change, pts.	-5~+10	+3
	Tensile Strength Change, %	-25(max)	+6
	Elongation Change, %	-45(max)	-18
	Volume Change, %	-10~+5	-4
EO34	Hardness Change, pts.	-10~+5	-3
	Tensile Strength Change, %	-45(max)	+5
	Elongation Change, %	-45(max)	-20
	Volume Change, %	0~+25	+10