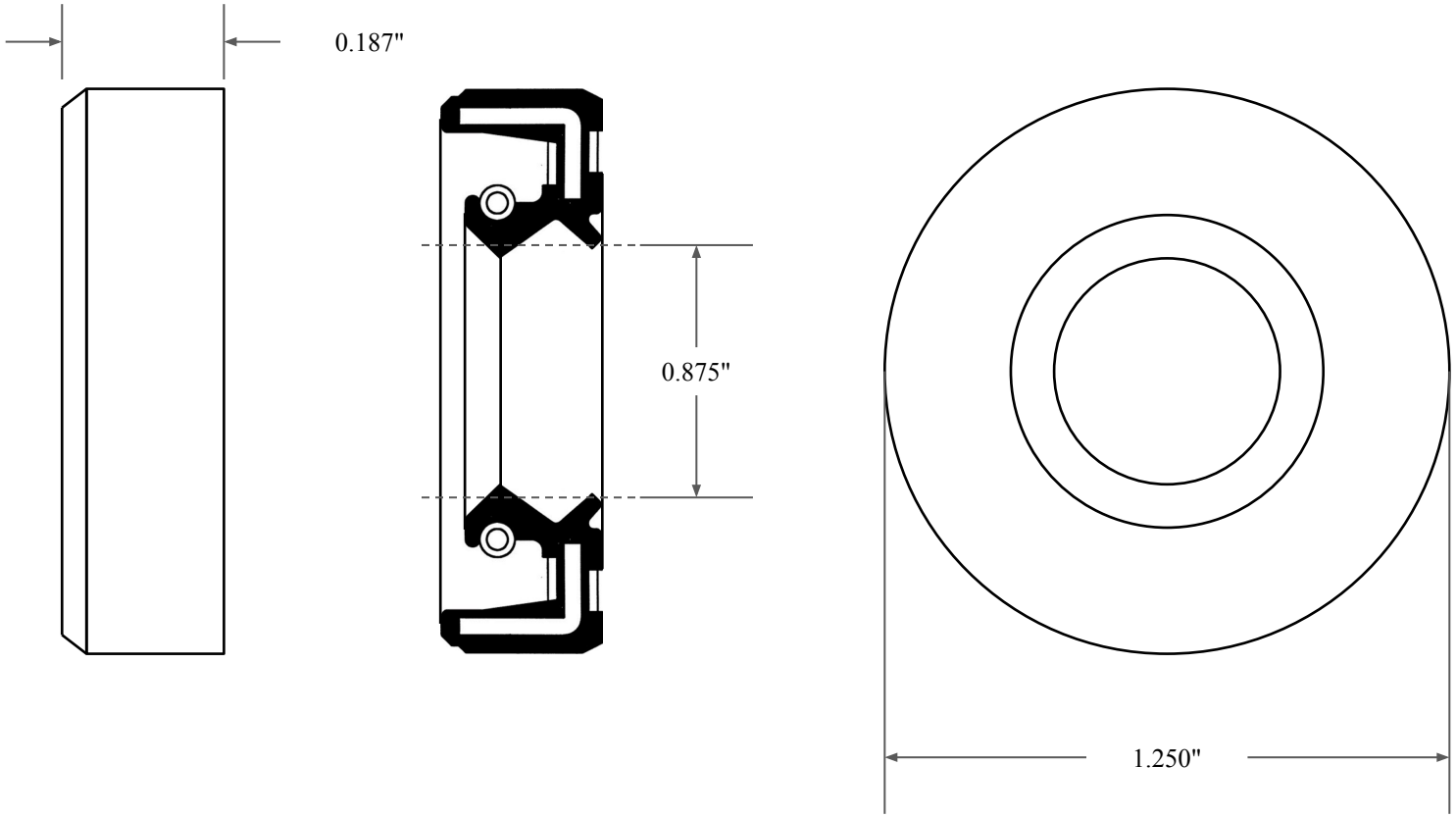

GLOBAL O-RING and SEAL
ALL-AROUND BETTER

14450 John F. Kennedy Blvd.
Houston, TX 77032
www.globaloring.com

Information in this drawing is provided for reference only

PART NUMBER **OS2293TC**

Inch Oil Seal - Nitrile Style TC
DUAL LIP W/ SPR, RBR OD