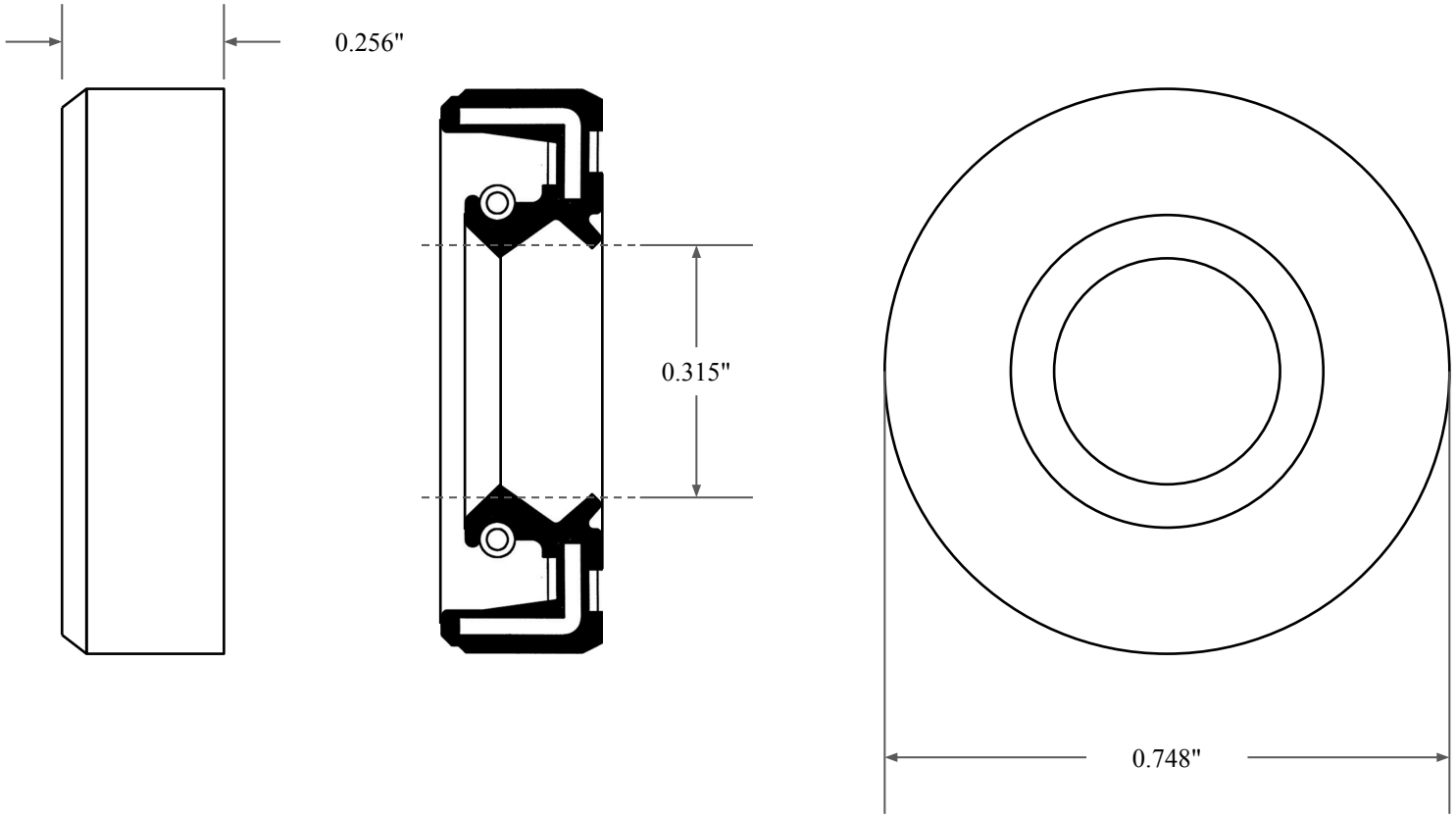

GLOBAL O-RING and SEAL ALL-AROUND BETTER	PART NUMBER **OS263TC**
14450 John F. Kennedy Blvd. Houston, TX 77032 www.globaloring.com	Inch Oil Seal - Nitrile Style TC DUAL LIP W/ SPR, RBR OD
Information in this drawing is provided for reference only	