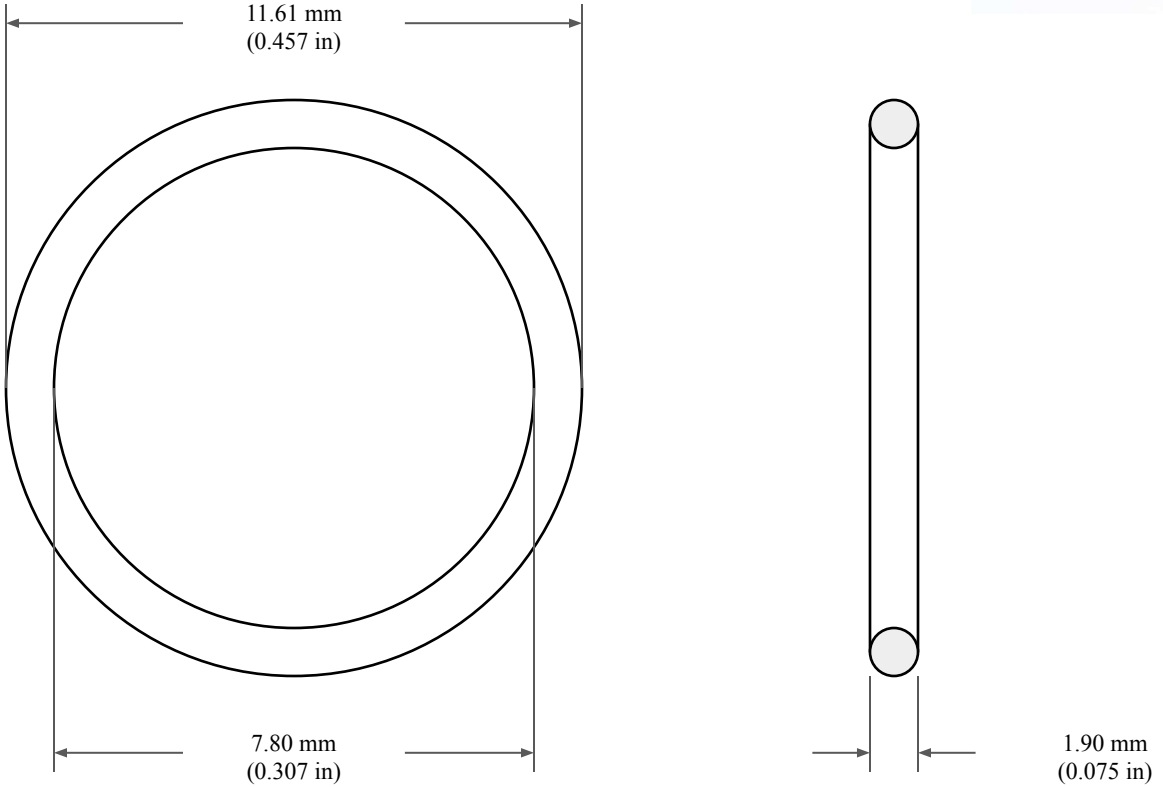

CS: 1.90 mm ±0.08 mm (0.075" ±0.003")

ID: 7.80 mm ±0.16 mm (0.307" ±0.006")

GLOBAL O-RING and SEAL ALL-AROUND BETTER	PART NUMBER **S1.90X007.8**
14450 John F. Kennedy Blvd. Houston, TX 77032 www.globaloring.com	Silicone FDA Compliant 70 Duro Metric O-Ring 1.90 mm CS X 7.80 mm ID
Information in this drawing is provided for reference only	

Compound	S70-A601	Silicone, Red, FDA Compliant
	Special Properties:	FDA Compliant
	Temperature Range (Static):	-55°C to 200°C
	Specification:	M7GE705 A19 B37 EA14 EO16 EO36 F19 G11

Compound Previously Known As: S70610

		Required Results	Typical Results
Properties	Hardness, (Shore A)	70±5	69
	Tensile Strength, psi(MPa)	725(5.00)	943(6.50)
	Elongation, (%)	150(min)	221
	Modulus at 100%, psi(MPa)		630
	Density, (Mg/m^3)		1.32
A19	Hardness Change, pts.	±10	+2
	Tensile Strength Change, %	-25(max)	-8
	Elongation Change, %	-30(max)	-28
	Weight Change, %		-2.3
B37	-	30%(button)(max)	20
EA14	Hardness Change, pts.	±5	-1
	Tensile Strength Change, %		-3
	Elongation Change, %		-14
	Volume Change, %	±5	+1.7
EO16	Hardness Change, pts.	-15~0	-6
	Tensile Strength Change, %	-20(max)	-3
	Elongation Change, %	-20(max)	-6
	Volume Change, %	0~+15	+4.3
EO36	Hardness Change, pts.	-40(max)	-20
	Tensile Strength Change, %		-21
	Elongation Change, %		-14
	Volume Change, %	+60(max)	+33.6
F19	Sample type: T-50,		
	Coolant : Isopropyl alcohol		
	Low Temperature Property	no crack	pass
G11		9kN/m(Die B)(min)	11.68