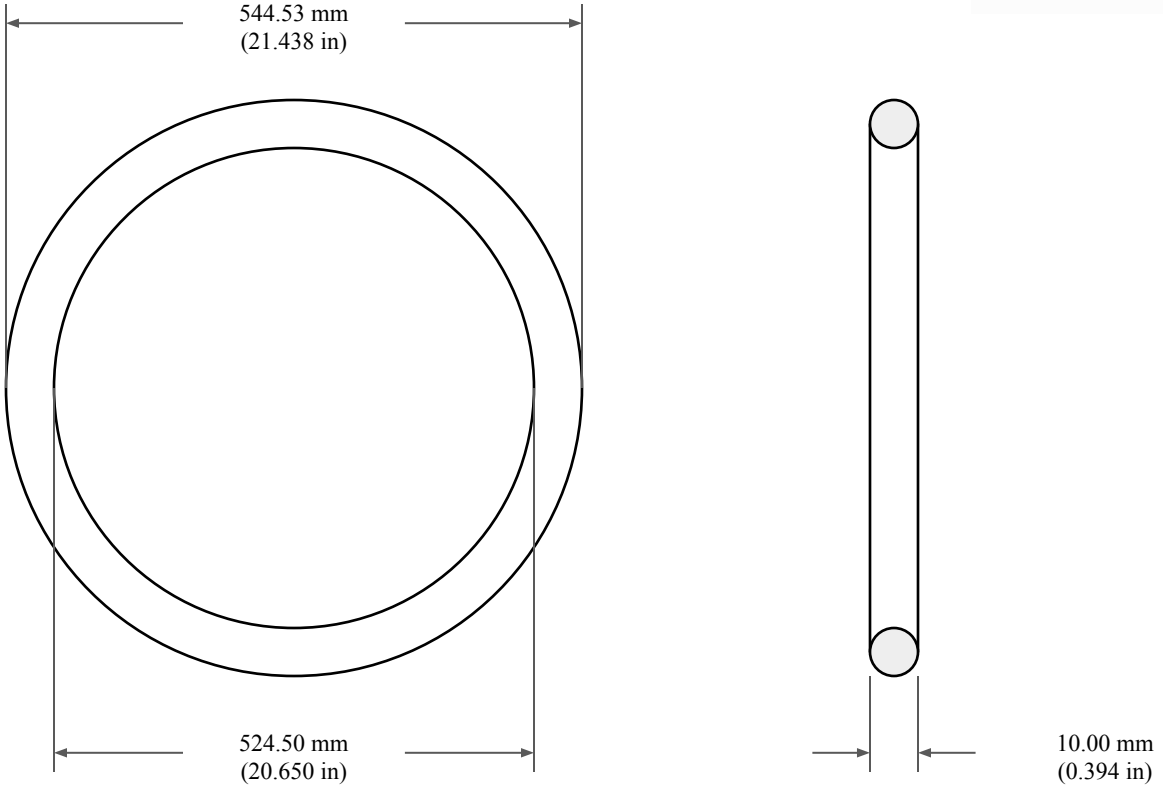


CS: 10.00 mm ±0.20 mm (0.394" ±0.008")

ID: 524.50 mm ±3.54 mm (20.650" ±0.139")

| | |
|---|---|
| GLOBAL O-RING and SEAL — ALL-AROUND BETTER | PART NUMBER **V10.00X524.5** |
| 14450 John F. Kennedy Blvd. Houston, TX 77032 www.globaloring.com | Viton 75 Duro Metric O-Ring 10.00 mm CS X 524.50 mm ID |
| Information in this drawing is provided for reference only | |

| | | |
|---|---|---|
| **Compound** | V75-B101 | Genuine Viton®, General Purpose |
| | Temperature Range (Static): | -25°C to 250°C |
| | Cure System: | Bisphenol |
| | Specification: | M4HK715 A1-10 B37 B38 EF31 EO78 Z1 |

Compound Previously Known As: V75101

| | | Required Results | Typical Results |
|---|---|---|---|
| **Properties** | Hardness, Shore A, pts | 75±5 | 77 |
| | Tensile Strength, psi, min | 1450(min) | 2077 |
| | Elongation, min, % | 175(min) | 175 |
| | Modulus @ 100%, psi | D412-16 | 1125 |
| | Density, Mg/m3 | | 1.84 |
| **A1-A10** | Hardness Change, pts, Shore A | +10(max) | +1 |
| | Tensile Strength Change, % | -25(max) | -2 |
| | Elongation Change, % | -25(max) | -8 |
| | Weight Change, % | | -1.7 |
| **B37** | ASTM D395-18, Method B | 50%(plied)(max) | 7.3 |
| **B38** | ASTM D395-18, Method B | 50%(plied)(max) | 8.1 |
| **EF31** | Hardness Change, pts, Shore A | ±5 | -2 |
| | Tensile Strength Change, % | -25(max) | -19 |
| | Elongation Change, % | -20(max) | -5 |
| | Volume Change, % | 0~+10 | +3.1 |
| **EO78** | Hardness Change, pts, Shore A | -15~+5 | -6 |
| | Tensile Strength Change, % | -40(max) | -16 |
| | Elongation Change, % | -20(max) | +1 |
| | Volume Change, % | 0~+15 | +9.5 |