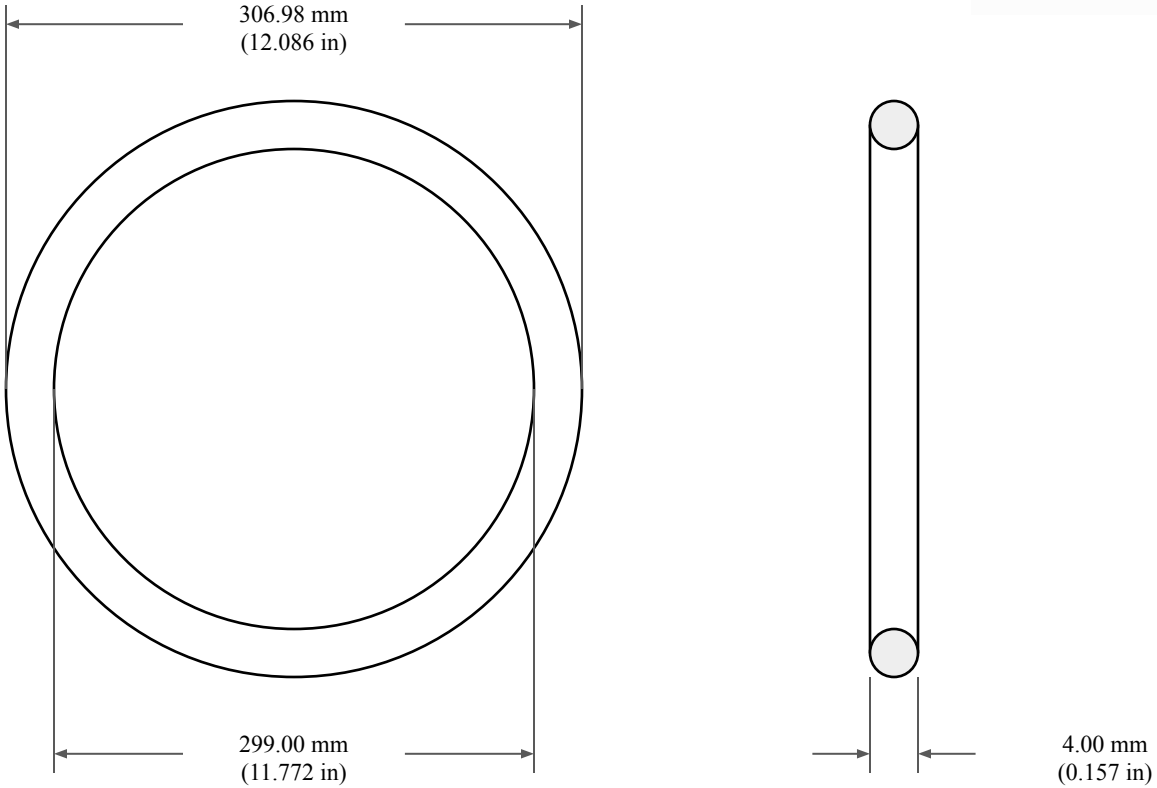

CS: 4.00 mm ±0.10 mm (0.157" ±0.004")

ID: 299.00 mm ±2.14 mm (11.772" ±0.084")

GLOBAL O-RING and SEAL ALL-AROUND BETTER	PART NUMBER **V4.00X299**
14450 John F. Kennedy Blvd. Houston, TX 77032 www.globaloring.com	Viton 75 Duro Metric O-Ring 4.00 mm CS X 299.00 mm ID
Information in this drawing is provided for reference only	

Compound	V75-B101	Genuine Viton®, General Purpose
	Temperature Range (Static):	-25°C to 250°C
	Cure System:	Bisphenol
	Specification:	M4HK715 A1-10 B37 B38 EF31 EO78 Z1

Compound Previously Known As: V75101

		Required Results	Typical Results
Properties	Hardness, Shore A, pts	75±5	77
	Tensile Strength, psi, min	1450(min)	2077
	Elongation, min, %	175(min)	175
	Modulus @ 100%, psi	D412-16	1125
	Density, Mg/m3		1.84
A1-A10	Hardness Change, pts, Shore A	+10(max)	+1
	Tensile Strength Change, %	-25(max)	-2
	Elongation Change, %	-25(max)	-8
	Weight Change, %		-1.7
B37	ASTM D395-18, Method B	50%(plied)(max)	7.3
B38	ASTM D395-18, Method B	50%(plied)(max)	8.1
EF31	Hardness Change, pts, Shore A	±5	-2
	Tensile Strength Change, %	-25(max)	-19
	Elongation Change, %	-20(max)	-5
	Volume Change, %	0~+10	+3.1
EO78	Hardness Change, pts, Shore A	-15~+5	-6
	Tensile Strength Change, %	-40(max)	-16
	Elongation Change, %	-20(max)	+1
	Volume Change, %	0~+15	+9.5